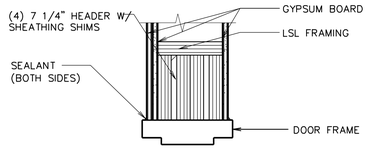

A HEAD
1 1/2" = 1'-0"

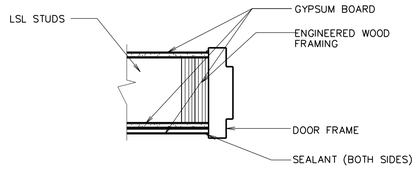

B JAMB
1 1/2" = 1'-0"

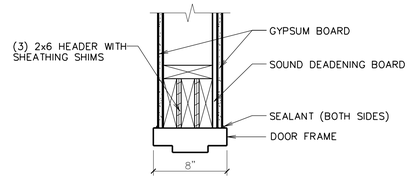

C HEAD
1 1/2" = 1'-0"

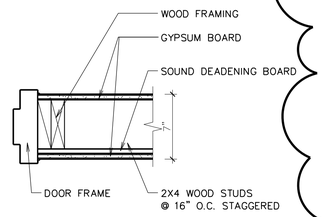

D JAMB
1 1/2" = 1'-0"

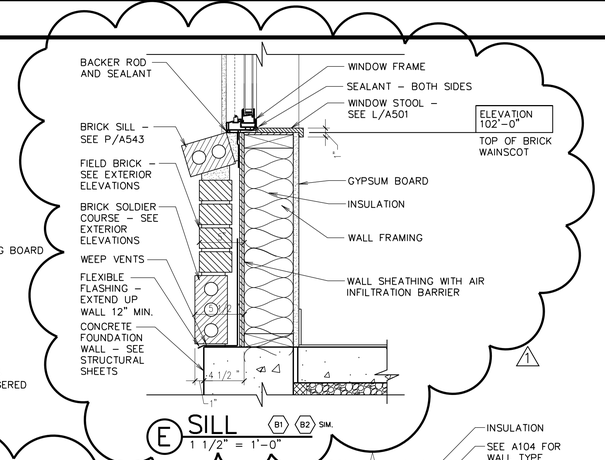

E SILL (B1) (B2) SIM.
1 1/2" = 1'-0"

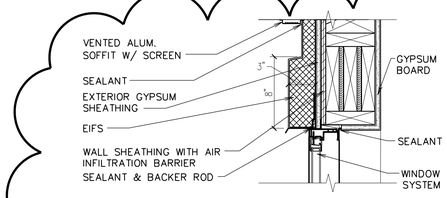

F HEAD (B1) (B2)
1 1/2" = 1'-0"

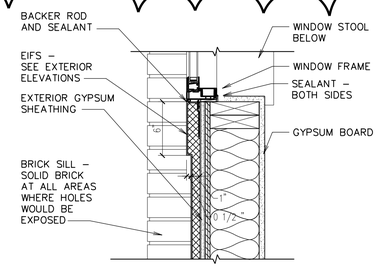

G JAMB (B1) (B2)
1 1/2" = 1'-0"

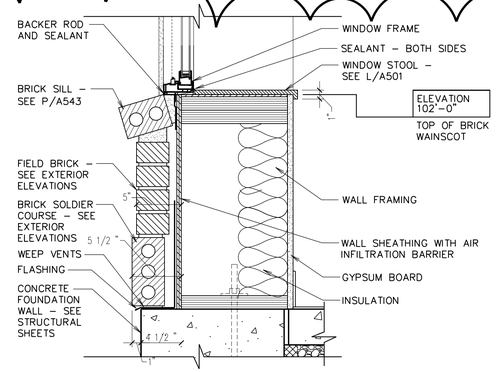

H SILL (B3) (B4)
1 1/2" = 1'-0"

NOTE: WALL TYPES AND CONDITIONS VARY. SEE REFER TO A103 FOR CLARIFICATION.

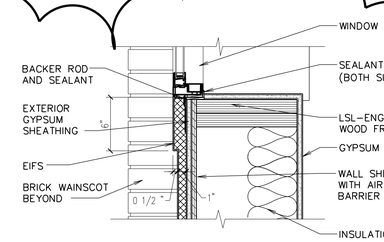

J JAMB (B3) (B4)
1 1/2" = 1'-0"

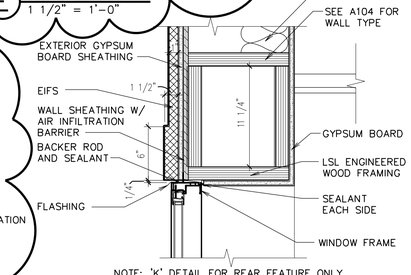

NOTE: 'K' DETAIL FOR REAR FEATURE ONLY. SEE L/A542 FOR OTHER CONDITIONS.

K HEAD (B4) (B3) SIM.
1 1/2" = 1'-0"

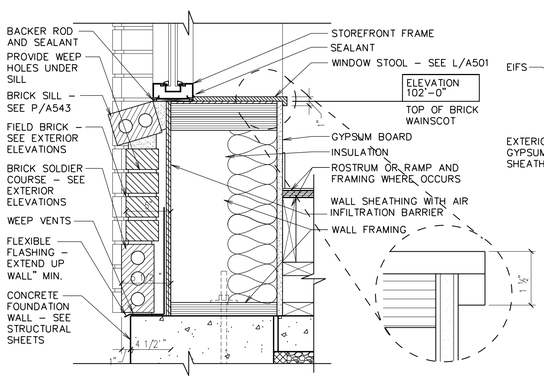

L SILL (A)
1 1/2" = 1'-0"

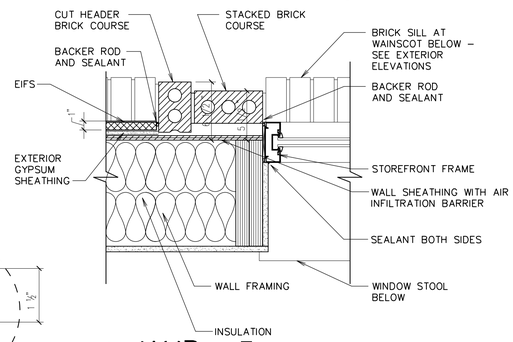

M JAMB (A)
1 1/2" = 1'-0"

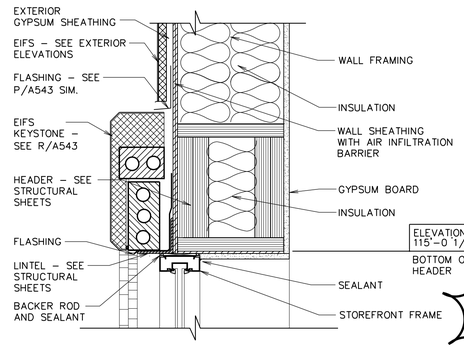

N HEAD (A)
1 1/2" = 1'-0"

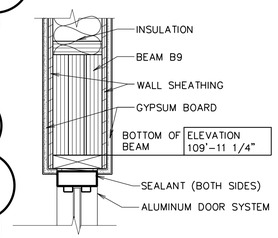

P HEAD
1 1/2" = 1'-0"

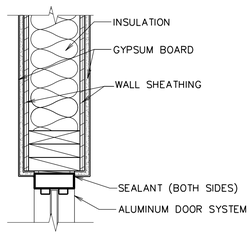

Q JAMB
1 1/2" = 1'-0"

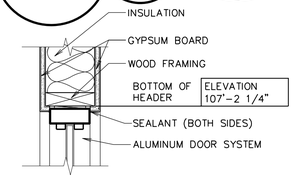

R HEAD
1 1/2" = 1'-0"

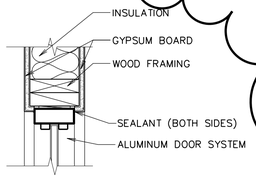

S JAMB
1 1/2" = 1'-0"

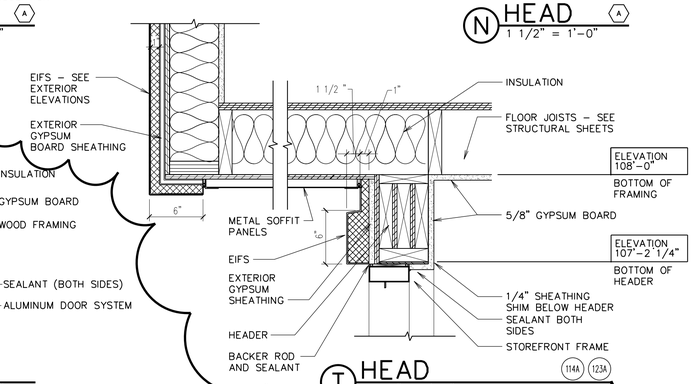

T HEAD (114A) (123A)
1 1/2" = 1'-0"

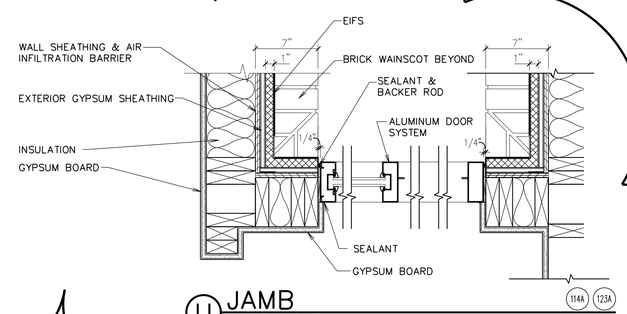

U JAMB (114A) (123A)
1 1/2" = 1'-0"

Architect/ Engineer:

NAZAR•WALSH ARCHITECTS

American Institute Of Architects AIA

401 CHERRY STREET SUITE 700
MACON, GEORGIA 31201 -USA-
TEL 478 750 7117
FAX 478 750 9192
E-MAIL
mail@nazarwalsh.com

Stamp:

STATE OF GEORGIA
J. KEVIN WALSH
CERTIFICATE NO. 9033
REGISTERED ARCHITECT

THOMASTON, GA BRANCH

JONESBORO, GA STAKE

HWY. 36 nr ROCK HILL SCHOOL ROAD
THOMASTON, GA. 30286

Project for:

THE CHURCH OF
JESUS CHRIST
OF LATTER-DAY SAINTS

Mark	Date (DD-MM-YY)	Description
1	03-23-10	VER. 3 REVISIONS

Architect Project Number: 0805

Plan Series: FAY-170-02-[07]-02

Project Number: 500-0881-08020101

Sheet Title: DOOR AND WINDOW DETAILS

Sheet: A604

Of 33

Date: MAR. 16, 2009