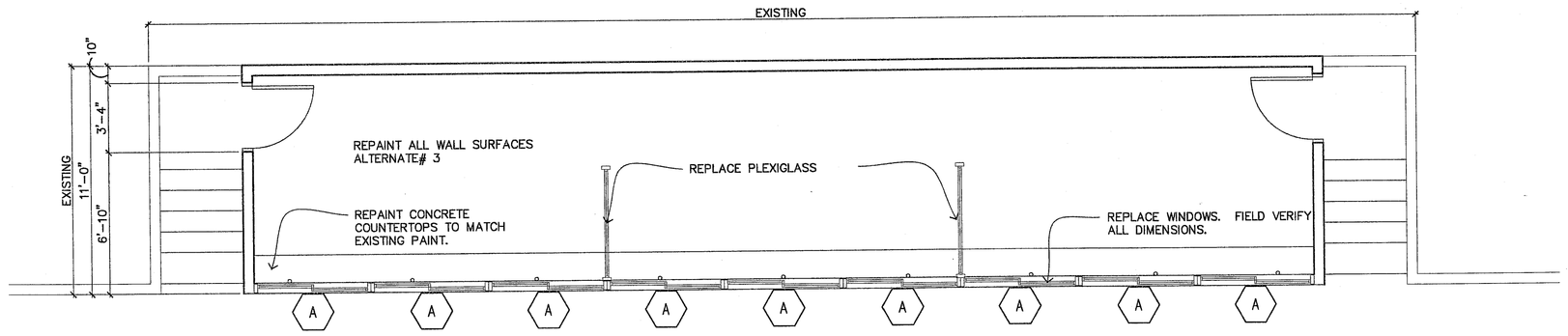


A | Plan - Stadium Pressbox — 1/4" = 1'-0"

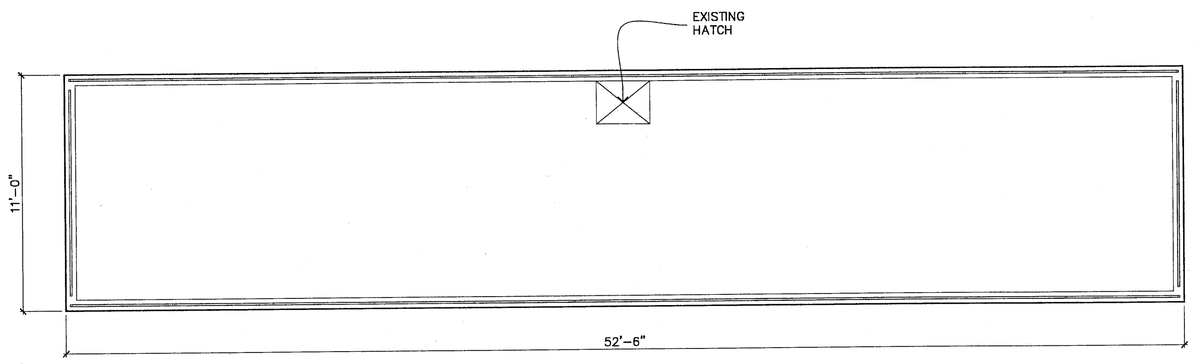


B | Existing Roof Plan - Press Box — 1/4" = 1'-0"

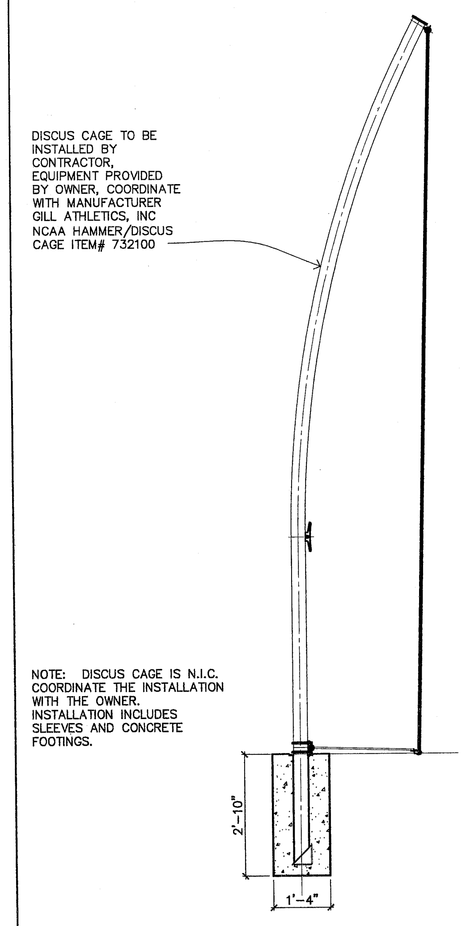


C | DISCUS CAGE ELEVATION — 1/2" = 1'-0"

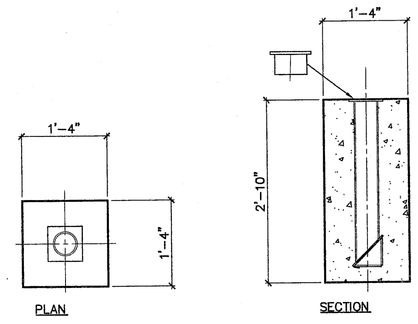


D | DISCUS CAGE DETAILS — 3/4" = 1'-0"

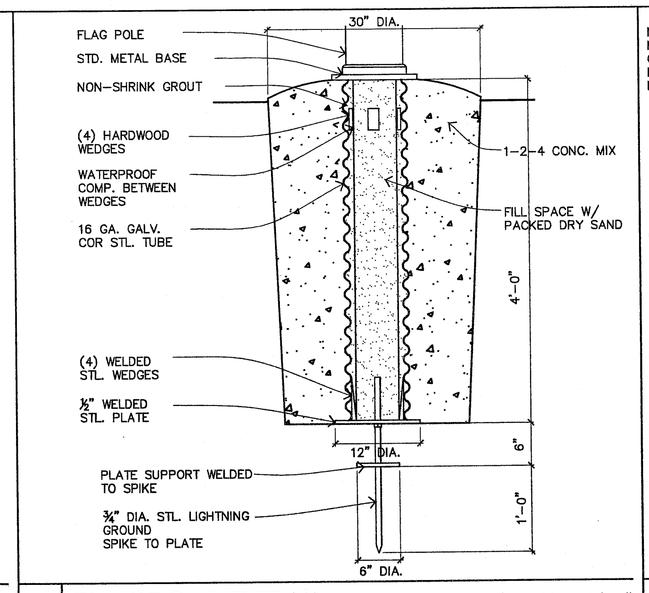


E | FLAGPOLE DETAIL — 1" = 1'-0"

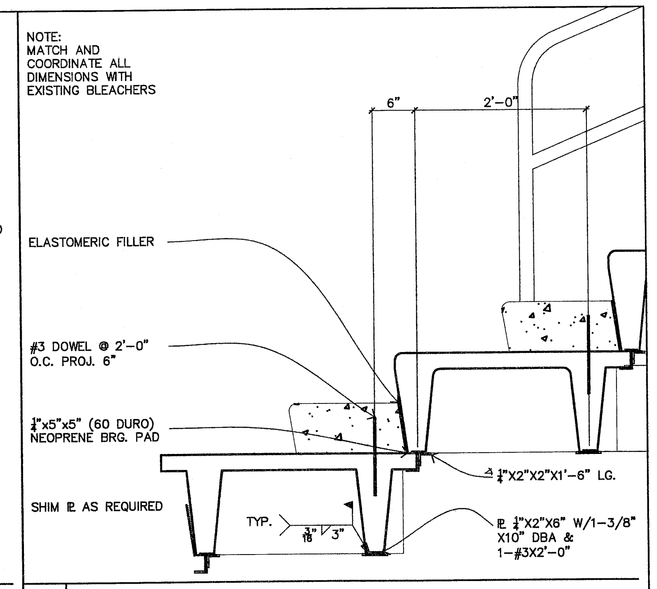


F | STEP TO SEAT DETAIL — 1" = 1'-0"

Fulton County Schools
Where Students Come First

Westlake High School
Stadium
Improvements

2400 Union Road, S.W.
Atlanta, Georgia 30331

© 2007 THESE DOCUMENTS REMAIN THE PROPERTY OF THE ARCHITECT AND MAY NOT BE USED OR REPRODUCED WITHOUT THE WRITTEN PERMISSION

RELEASED FOR CONSTRUCTION

| | | REVISIONS |
|---|---|---|
| 8/24/09 | BID SET | |
| 9/18/09 | RELEASE | |

STATE OF GEORGIA
DAVID W. TENCH
CERTIFICATE NO. 6898
REGISTERED ARCHITECT

Gardner
Spencer
Smith
Tench &
Jarbeau
A Professional Corporation
for the Practice of Architecture

127 Peachtree St., NE
Suite 1020
Atlanta, Georgia 30303
404 522 8805
404 521 2118 (f)
www.gsstj.com

PROJECT NO.
09102

SHEET TITLE
PRESSBOX PLANS

SHEET NO.
A1.02