DOOR AND FRAME SCHEDULE

MARK	ROOM	DOOR SIZE WD	DOOR SIZE HGT	DOOR SIZE THK	DOOR MATL	DOOR ELEV	FRAME MATL	FRAME ELEV	FIRE RATING	HEAD	JAMB	SILL	HDWR SET	Signage	NOTES
A100	REFEREE	3'-0"	7'-0"	1 3/4"	HM	FLU	HM	1		7201H	7201J		1	A	Insulated
A101	STORAGE	3'-0"	7'-0"	1 3/4"	HM	FLU	HM	1		3200H	3200J		4	A	
A102	TOILET	3'-0"	7'-0"	1 3/4"	HM	FLU	HM	1		3200H	3200J		2	B	
A103	STORAGE	3'-0"	7'-0"	1 3/4"	HM	FLU	HM	1		7201H	7201J		5	A	Insulated
A103B	STORAGE	10'-0"	8'-0"	1"	HM	OVHD	---	---		7500H	---		3		Insulated
A103C	STORAGE	10'-0"	8'-0"	1"	HM	OVHD	---	---		7500H	---		3		Insulated

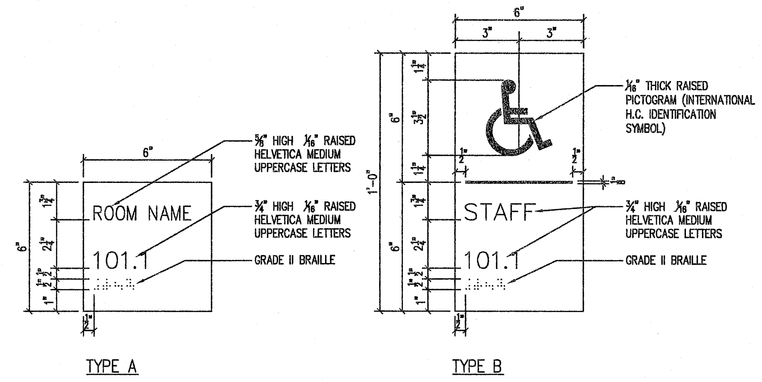

TYPE A

TYPE B

* NOTES:
.08" SEMI-MATTE CAST ACRYLIC PLAQUE BONDED TO .08" THICK BACKPLATE MOUNTED TO SURFACE WITH 1/32" VINYL TAPE AND SILASTIC ADHESIVE (TYP)

SIGNAGE TO COMPLY WITH ADA REQUIREMENTS

SEE SPECIFICATIONS FOR SIGN TYPE AND TEXT

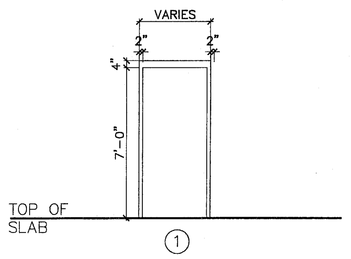

FRAME ELEVATIONS

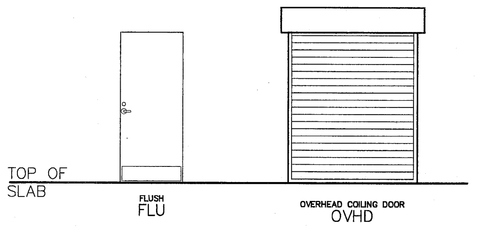

DOOR ELEVATIONS

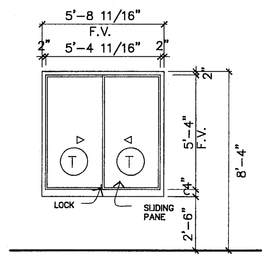

WINDOW ELEVATION

GENERAL NOTES:

1. (T) REPRESENTS TEMPERED GLASS UNITS.

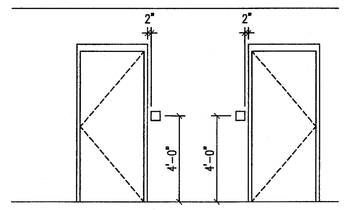

TYPICAL LOCATION OF SIGNAGE – LATCH SIDE OF DOOR

1

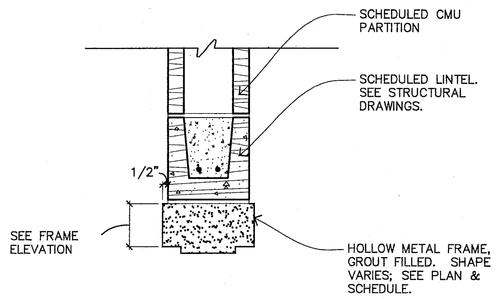

3200H HEAD DETAIL 1 1/2" = 1'-0"

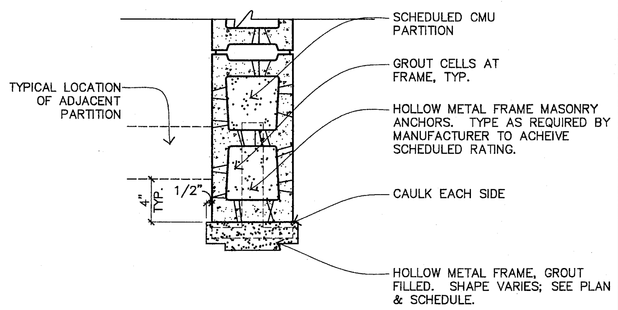

3200J JAMB DETAIL 1 1/2" = 1'-0"

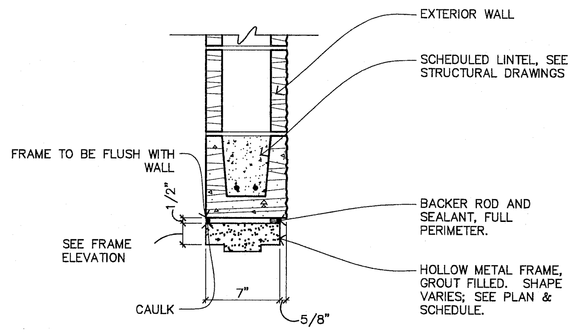

7201H HEAD DETAIL 1 1/2" = 1'-0"

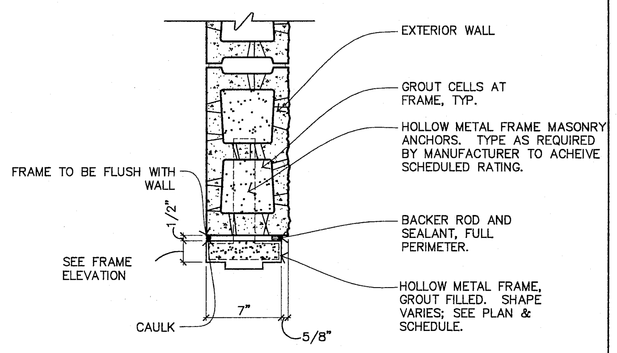

7201J JAMB DETAIL 1 1/2" = 1'-0"

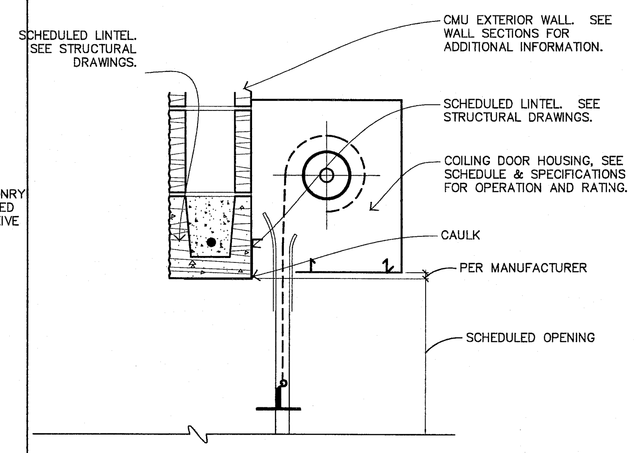

7500H HEAD DETAIL 1 1/2" = 1'-0"

Fulton County Schools
Where Students Come First

Westlake High School
Stadium Improvements

2400 Union Road, S.W.
Atlanta, Georgia 30331

© 2007 THESE DOCUMENTS REMAIN THE PROPERTY OF THE ARCHITECT AND MAY NOT BE USED OR REPRODUCED WITHOUT WRITTEN PERMISSION

RELEASED FOR CONSTRUCTION

8/24/09	BID SET
9/18/09	RELEASE

REVISIONS

STATE OF GEORGIA
DAVID W. TENCH
CERTIFICATE NO. 6956
REGISTERED ARCHITECT

Gardner Spencer Smith Tench & Jarbeau
A Professional Corporation for the Practice of Architecture

127 Peachtree St., NE
Suite 1020
Atlanta, Georgia 30303
404 522 8805
404 521 2118 (f)
www.gsstj.com

PROJECT NO
09102

SHEET TITLE
DOOR AND FRAME SCHEDULE

SHEET NO
A2.02