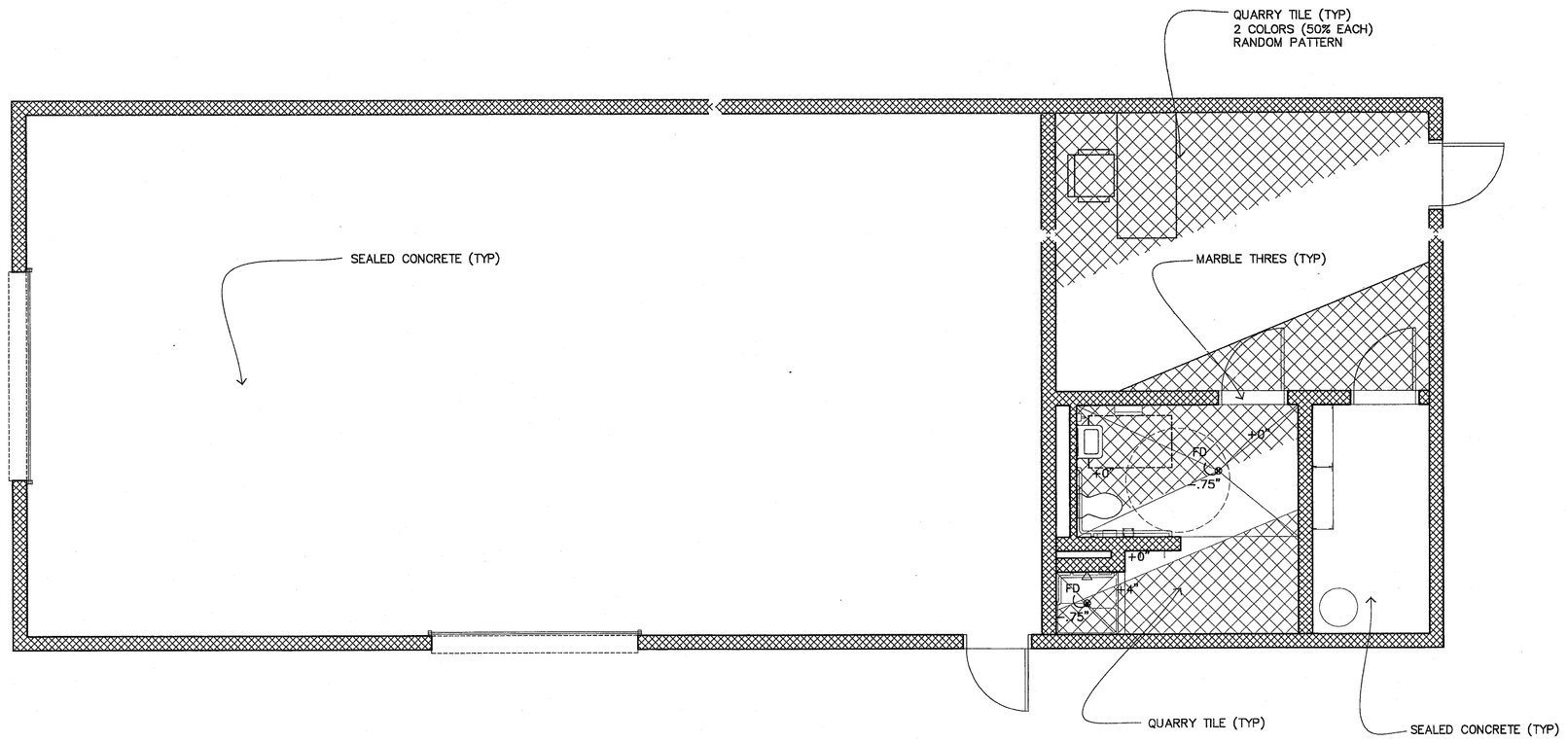

A | REFEREE OUTBUILDING - FINISH PLAN 1/4" = 1'-0"

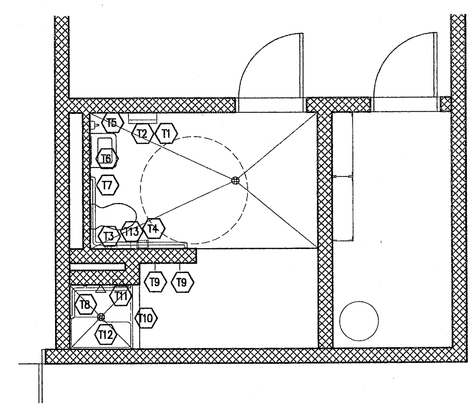

B | PLAN - TOILET A103 1/4" = 1'-0"

TOILET ACCESSORIES LEGEND

	DESCRIPTION
T1	PAPER TOWEL DISPENSER
T2	WALL-MOUNTED WASTE RECEPTACLE
T3	NAPKIN DISPOSAL
T4	TOILET TISSUE HOLDER
T5	SOAP DISPENSER
T6	18"x24" MIRROR
T7	GRAB BAR - 36X54 2-WALL
T8	GRAB BAR - SHOWER
T9	ROBE HOOK
T10	SHOWER CURTAIN ROD
T11	SOAP DISH
T12	SHOWER SEAT
T13	TOILET SET COVER

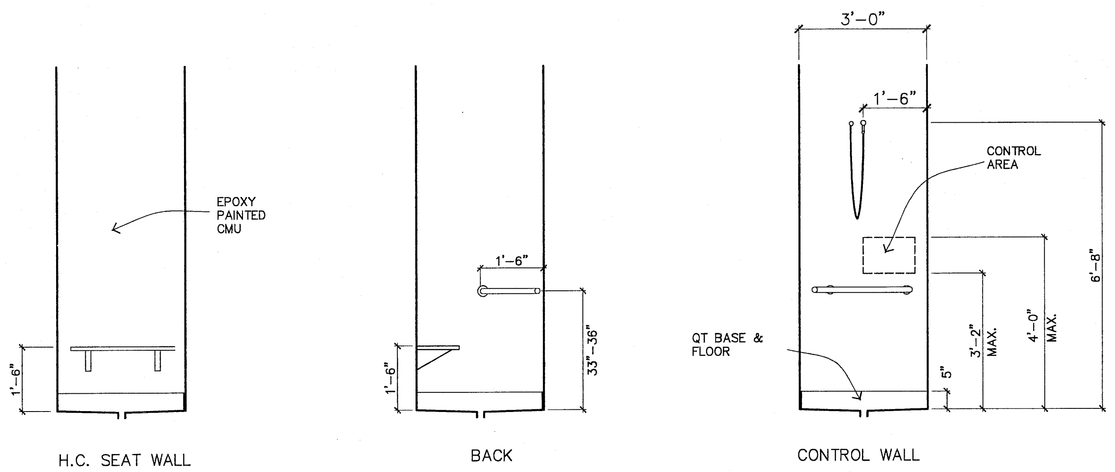

C | H.C. SHOWER ELEVATIONS 1/2" = 1'-0"

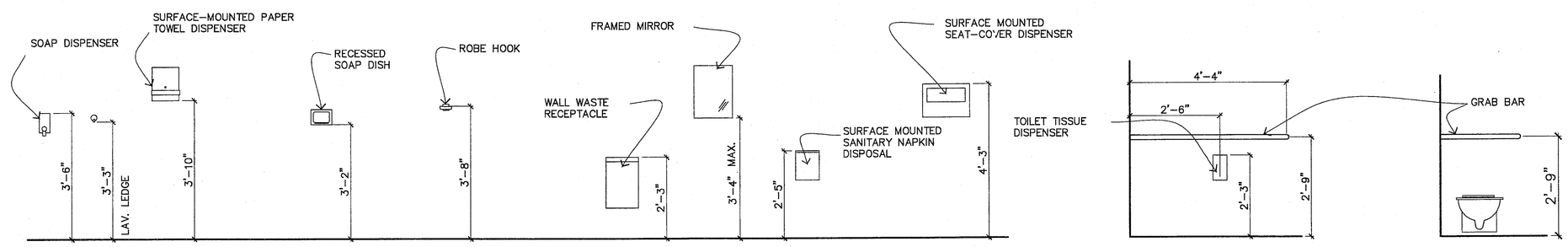

D | ACCESSORIES MOUNTING HEIGHT 1/2" = 1'-0"

GENERAL NOTES, TOILET ROOMS:

1. SIGNAGE FOR RESTROOMS SHALL BE RAISED AND BRAILLE CHARACTERS AND PICTORIAL SYMBOL SIGNS. SIGNS SHALL BE INSTALLED ON THE WALL ADJACENT TO THE LATCH SIDE OF THE DOOR. WHERE THERE IS NO WALL SPACE TO THE LATCH SIDE OF THE DOOR, INCLUDING AT DOUBLE LEAF DOORS, SIGNS SHALL BE PLACED ON THE NEAREST ADJACENT WALL. MOUNTING HEIGHT SHALL BE 60 INCHES ABOVE THE FINISH FLOOR TO THE CENTERLINE OF THE SIGN.

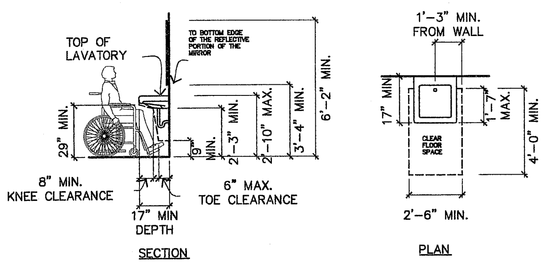

ALL LAVATORIES, WHETHER WALL-HUNG OR IN A COUNTER SHALL BE INSTALLED TO COMPLY WITH THE CLEARANCES AND DIMENSIONS NOTED ABOVE.
ALL LAVATORIES SHALL BE EQUIPPED WITH SPECIFIED PIPE PROTECTION ENCLOSURES INSTALLED TO MEET CLEARANCES DEFINED BY DASHED LINE INDICATED IN THE SECTION ABOVE.

E | ACCESSIBLE LAVATORY 1/4" = 1'-0"

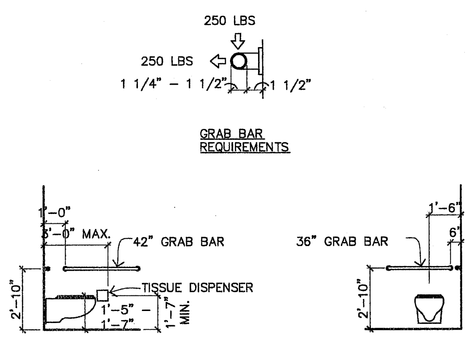

WATER CLOSETS IN ACCESSIBLE STALLS AND WATER CLOSETS IN ACCESSIBLE TOILET ROOMS SHALL BE INSTALLED AS SHOWN UNLESS DIMENSIONED OR NOTED OTHERWISE.

F | ACCESSIBLE TOILET STALL 1/4" = 1'-0"

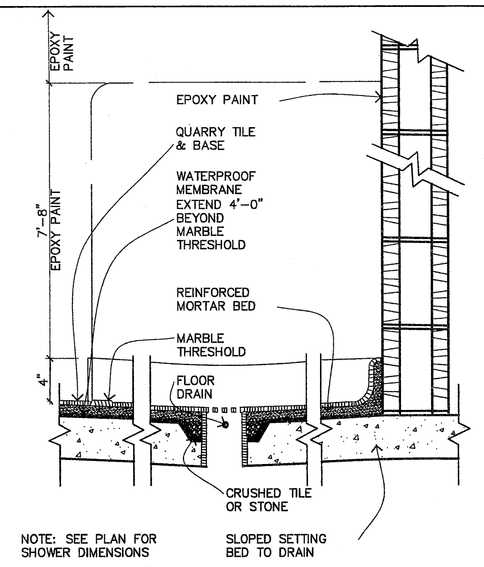

G | SECTION @ SHOWER 1 1/2" = 1'-0"

Fulton County Schools
Where Students Come First

Westlake High School
Stadium
Improvements

2400 Union Road, S.W.
Atlanta, Georgia 30331

© 2007 THESE DOCUMENTS REMAIN THE PROPERTY OF THE ARCHITECT AND MAY NOT BE USED OR REPRODUCED WITHOUT WRITTEN CONSENT.

RELEASED FOR CONSTRUCTION

8/24/09	BID SET
9/18/09	RELEASE

REVISIONS

STATE OF GEORGIA
DAVID W. TENCH
CERTIFICATE NO. 6895
REGISTERED ARCHITECT

Gardner
Spencer
Smith
Tench &
Jarbeau
A Professional Corporation
for the Practice of Architecture

127 Peachtree St., NE
Suite 1020
Atlanta, Georgia 30303
404 522 8805
404 521 2118 (f)
www.gsstj.com

PROJECT NO.
09102

SHEET TITLE
FINISH PLANS & INTERIOR DETAILS

SHEET NO.
A2.03