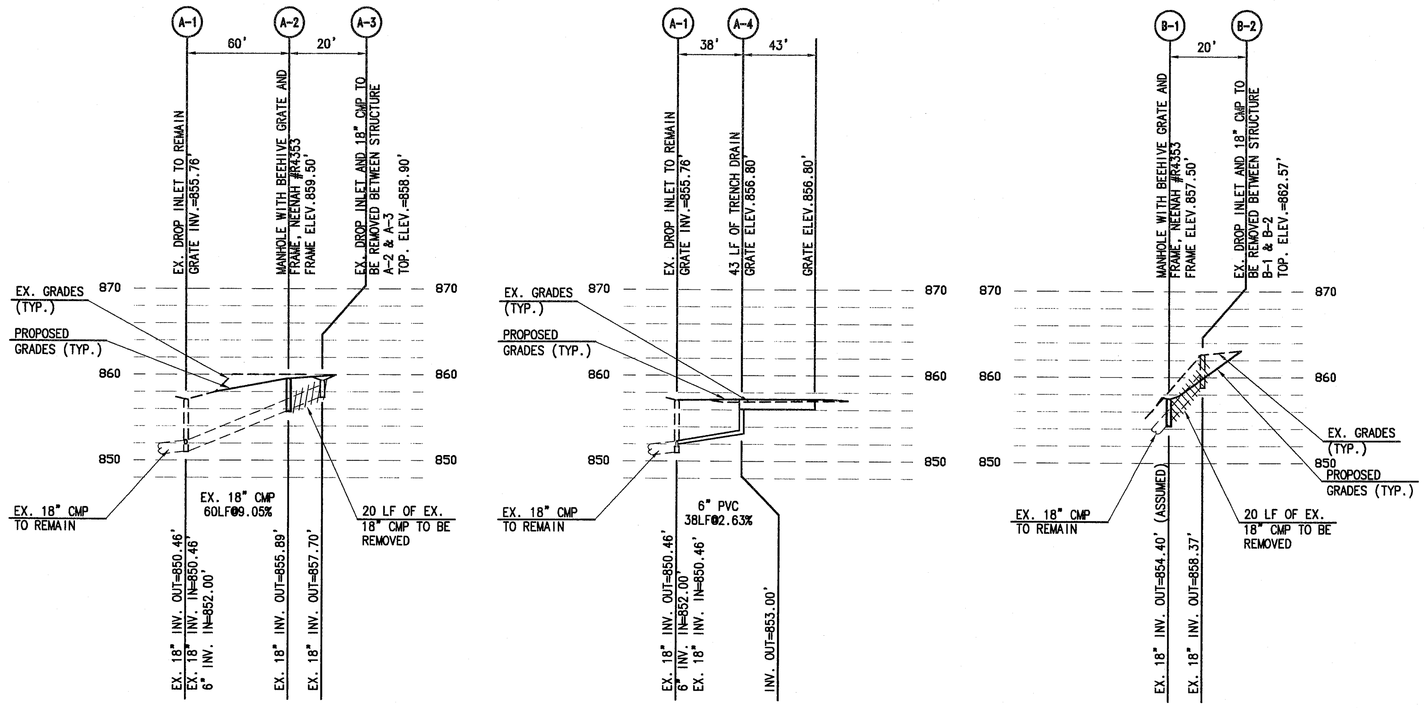

STORM SEWER PROFILES

GRAPHIC SCALE: 1"=50'(H), 1"=10'(V)

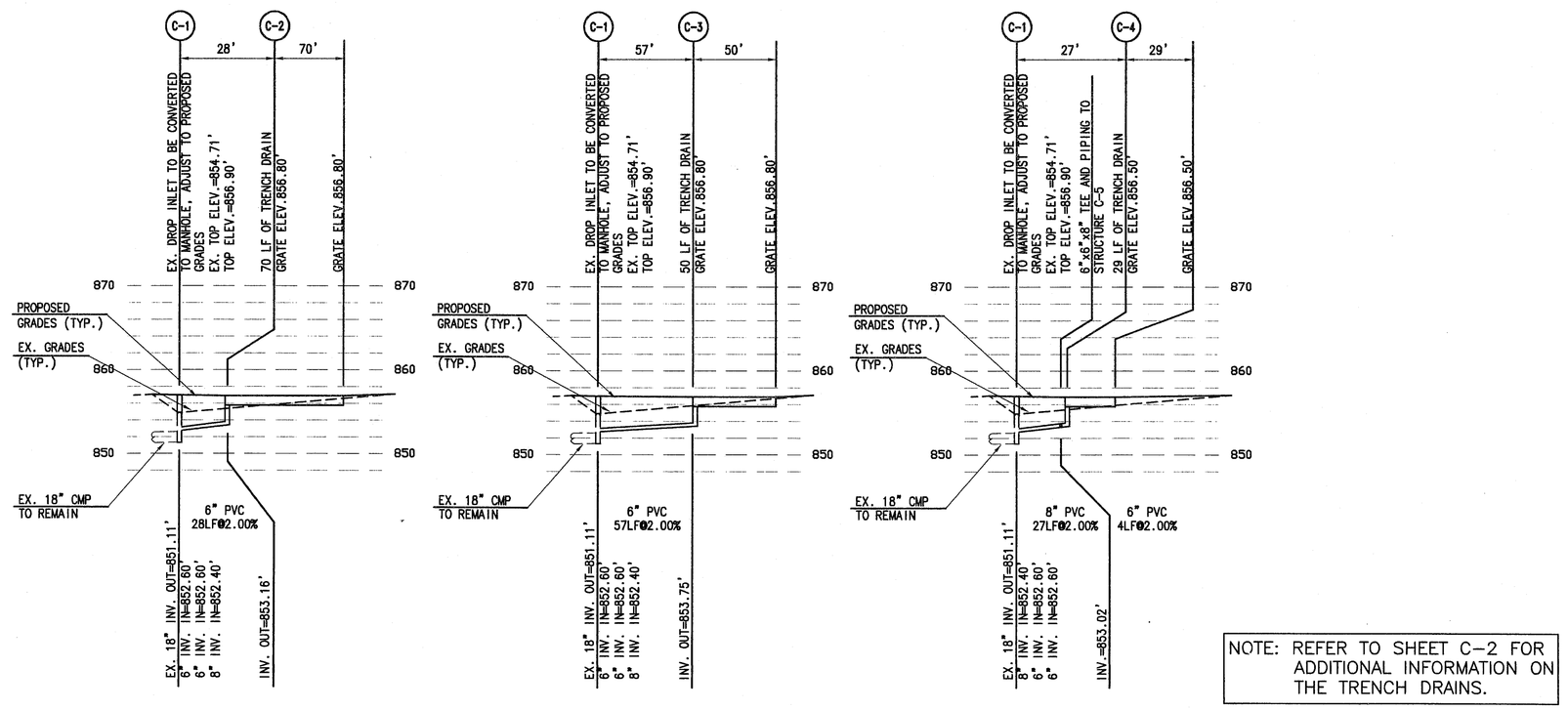

NOTE: REFER TO SHEET C-2 FOR ADDITIONAL INFORMATION ON THE TRENCH DRAINS.

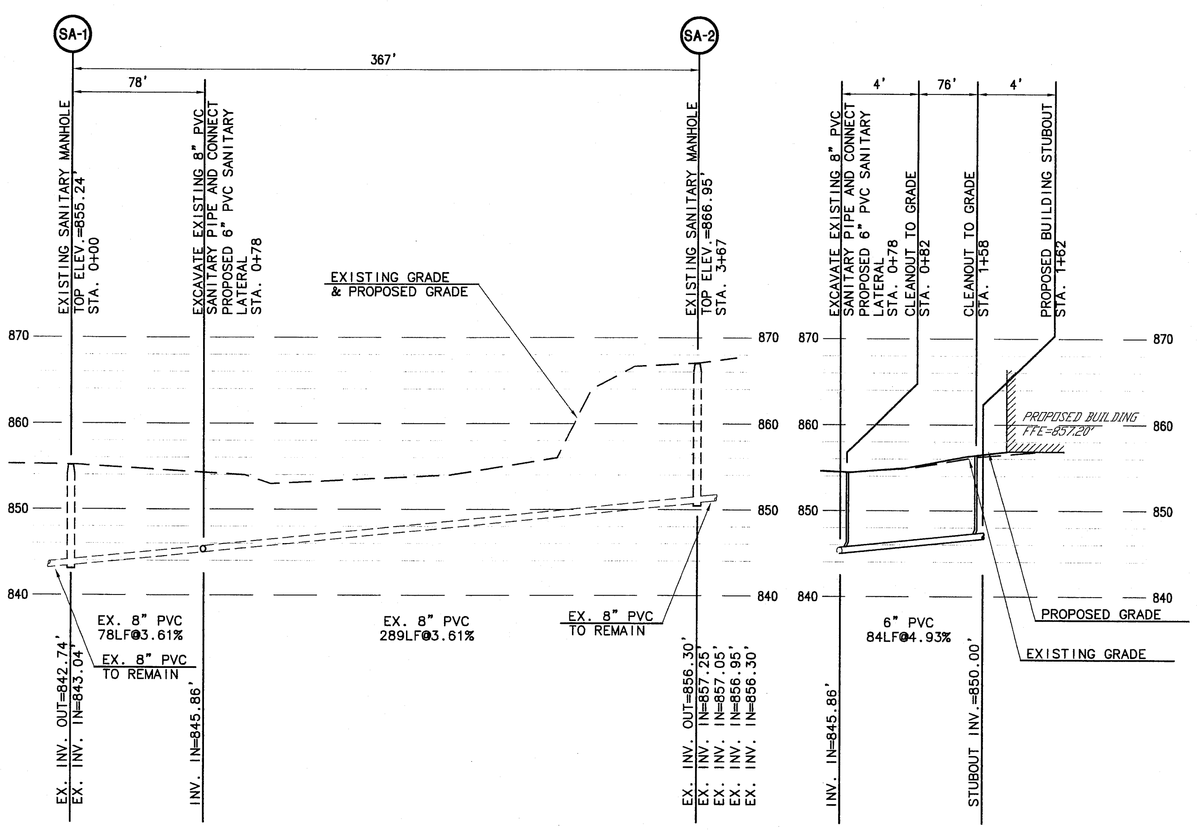

SANITARY SEWER PROFILES

GRAPHIC SCALE: 1"=50'(H), 1"=10'(V)

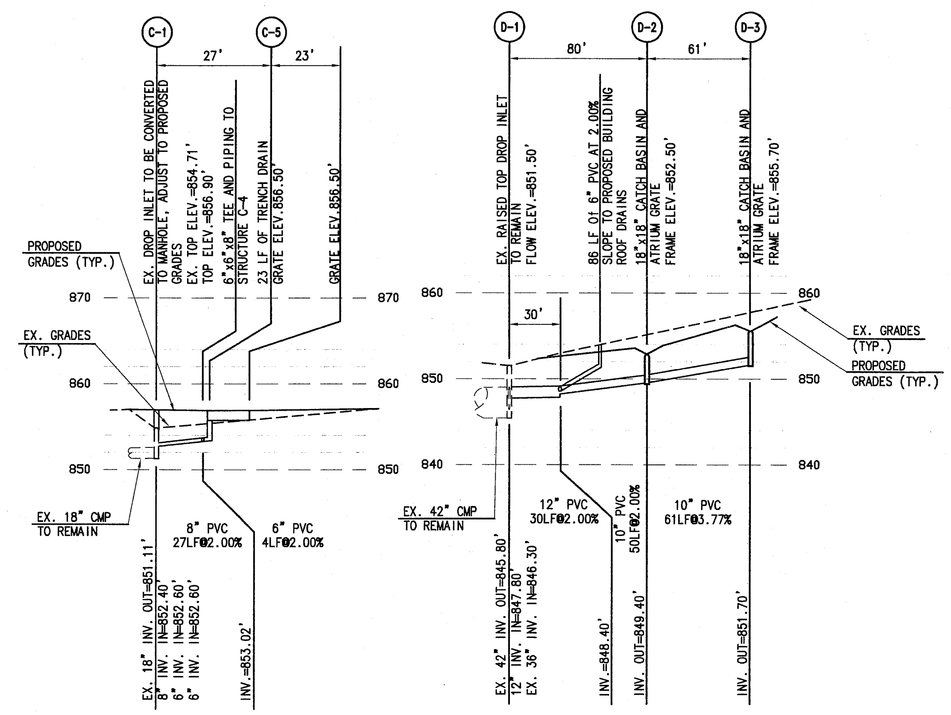

STORM SEWER PROFILES

GRAPHIC SCALE: 1"=50'(H), 1"=10'(V)

RETAINING WALL STRUCTURAL REQUIREMENTS

GENERAL

1. IF FIELD CONDITIONS VARY FROM THOSE INDICATED ON THE DRAWINGS AND NECESSITATE CHANGES TO THE DRAWINGS, CONTACT THE ENGINEER BEFORE PROCEEDING.
2. SUBMIT SHOP DRAWINGS FOR REVIEW PRIOR TO FABRICATION FOR THE FOLLOWING ITEMS:
   - CONCRETE REINFORCING STEEL
   - CONCRETE MIX DESIGN
3. SUBMIT CONCRETE TESTS PERFORMED BY AN ACI CERTIFIED TESTING LABORATORY FOR SEVEN AND TWENTY-EIGHT DAY CONCRETE TEST CYLINDER BREAKS. MINIMUM 3 CYLINDERS FOR EACH SEPARATE POUR ON FOR EACH 20 CUBIC YARDS POURED.
4. ALL REFERENCED STANDARDS AND SPECIFICATIONS ARE INTENDED TO BE THE LATEST REVISION OF THE PUBLISHED VOLUMES.

FOUNDATIONS

1. SPREAD FOOTINGS ARE DESIGNED TO BEAR ON SOILS HAVING A BEARING CAPACITY OF 3,000 POUNDS PER SQUARE FOOT. TEST PIT SOIL BEARING CAPACITY PRIOR TO FOUNDATION CONSTRUCTION. IF SOIL TESTS INDICATE A LESSER BEARING CAPACITY, NOTIFY THE ENGINEER IMMEDIATELY FOR AN EVALUATION OF THE PROPOSED FOUNDATION SYSTEM.
2. ALL SOIL CONDITIONS ARE SUBJECT TO EVALUATION BY A SOILS ENGINEER PRIOR TO BEGINNING FOUNDATION CONSTRUCTION. SOILS NOT HAVING ADEQUATE CAPACITY TO SUPPORT DESIGN LOADS MUST BE REPLACED OR STRENGTHENED MODIFIED PRIOR TO PROCEEDING WITH FOUNDATION CONSTRUCTION.

CONCRETE

1. ALL MATERIALS AND WORKMANSHIP, DETAILING, FABRICATION, ACCESSORIES, AND PLACEMENT OF REINFORCING AND CONCRETE SHALL CONFORM TO THE ACI "MANUAL OF STANDARD PRACTICE FOR DETAILING REINFORCED CONCRETE STRUCTURES" ACI-315R, "BUILDING CODE REQUIREMENTS FOR REINFORCED CONCRETE".
2. CONCRETE SHALL BE NORMAL WEIGHT GRAY CONCRETE AND DEVELOP A MINIMUM COMPRESSIVE STRENGTH AT 28 DAYS OF: FOUNDATION: 3,000 P.S.I. WITH 4" SLUMP
3. REINFORCING BARS SHALL BE DEFORMED BARS CONFORMING TO ASTM A615. GRADE 40 FOR #7 BARS. GRADE 60 FOR #6 BARS AND LARGER.
4. WHERE THE LENGTH OF A BAR IS GIVEN, AND IT IS TO BE HOOKED, THE HOOK SHALL BE IN ADDITION TO THE LENGTH GIVEN.
5. LAP ALL REINFORCING 40 BAR DIAMETERS. BEND ALL HORIZONTAL CORNER BARS TO CONFORM WITH TURN CONFIGURATION (90 DEGREES OR 45 SYMMETRIC EXPOSITED) AND EXTENDS/LAP BARS 30 DIAMETERS.
6. UNLESS SHOWN OTHERWISE, THE CLEAR COVER FOR REINFORCING BARS SHALL BE AS FOLLOWS:
   - WALLS EXPOSED TO GROUND OR WEATHER - 1.5" FOR #5 BARS AND SMALLER, 2" FOR #6 AND LARGER
   - WALLS AND FOOTINGS PLACED ON THE GROUND WITHOUT FORMS - 3"
7. EXPOSE 6" FOOTINGS SHOWN ON THE DRAWINGS ARE MINIMAL. FOOTING ELEVATION MAY BE LOWERED IF FOUND NECESSARY BY THE ENGINEER.
8. ALL CONCRETE POURS SHALL BE CONTINUOUS BETWEEN CONSTRUCTION JOINTS.
9. ALL CONSTRUCTION JOINTS SHALL BE ROUGH SURFACE AND CLEANED BEFORE THE NEXT CONCRETE POUR.

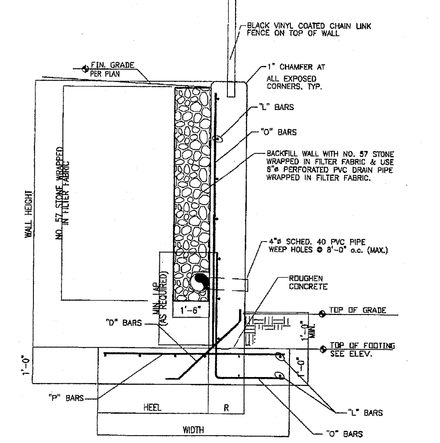

CANTILEVER_CONCRETE_RETAINING_WALL

NO SCALE

CANTILEVER RETAINING WALL SCHEDULE

CONCRETE DIMENSIONS				REINFORCING			
WALL HEIGHT	HEEL	WIDTH	R	O	D	P	L
0'-1" TO 5'-0"	1'-5"	2'-8"	8"	#4 @ 12" o.c.	#4 @ 12" o.c.	#5 @ 12" o.c.	#5 @ 12" o.c.
5'-1" TO 7'-0"	2'-0"	3'-10"	10"	#4 @ 12" o.c.	#4 @ 12" o.c.	#5 @ 12" o.c.	#5 @ 12" o.c.
7'-1" TO 9'-0"	2'-10"	4'-8"	1'-0"	#4 @ 9" o.c.	#5 @ 12" o.c.	#5 @ 9" o.c.	#5 @ 12" o.c.
9'-1" TO 11'-0"	3'-2"	5'-4"	1'-0"	#5 @ 9" o.c.	#5 @ 12" o.c.	#5 @ 9" o.c.	#5 @ 12" o.c.

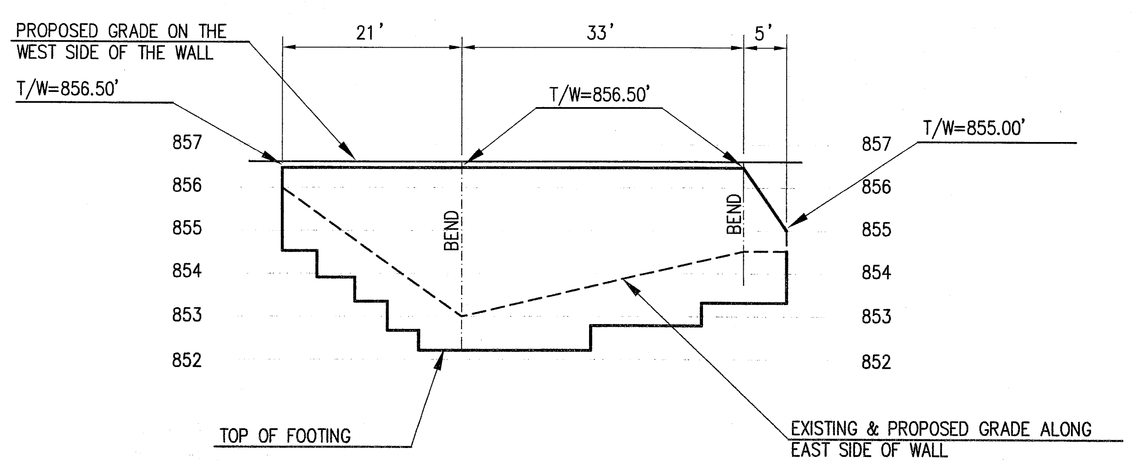

CONCRETE RETAINING WALL PROFILE

GRAPHIC SCALE: 1"=10'(H), 1"=2'(V)

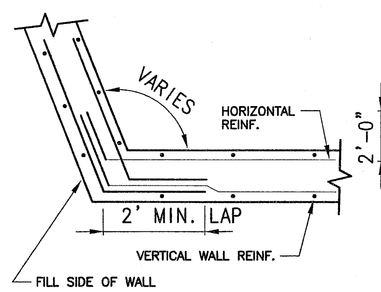

CONCRETE WALL BEND

NTS

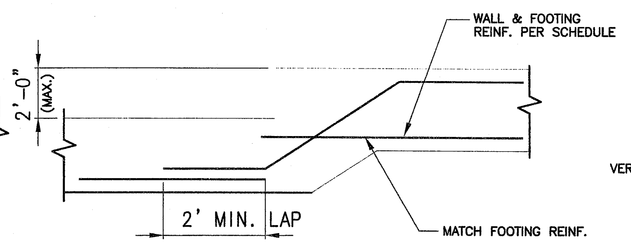

STEP FOOTING REINF.

NTS

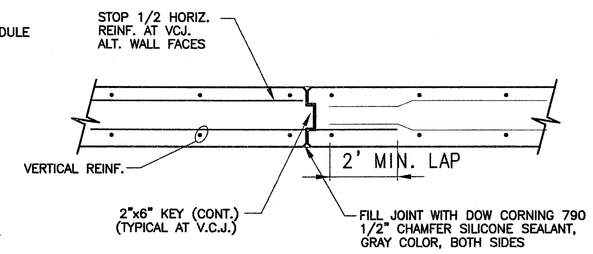

VERTICAL CONTROL JOINT (V.C.J.)

Fulton County Schools
Where Students Come First

Westlake High School Stadium Improvements

2400 Union Road, S.W.
Atlanta, Georgia 30331

THESE DOCUMENTS REMAIN THE PROPERTY OF THE ARCHITECT AND MAY NOT BE USED OR REPRODUCED WITHOUT WRITTEN PERMISSION.
© 2007

RELEASE DATE / ISSUE DATE

REVISIONS

Gardner Spencer Smith Tench & Jarbeau
A Professional Corporation for the Practice of Architecture

127 Peachtree St., NE
Suite 1020
Atlanta, Georgia 30303
404 522 8805
404 521 2118 (f)
www.gsstj.com

PROJECT NO.

09102

SHEET TITLE

PROFILES & DETAILS

SHEET NO.

C-6