| PLUMBING FIXTURE SCHEDULE | | | | | | |
|---|---|---|---|---|---|---|
| MARK | DESCRIPTION | CONNECTIONS | | | RIM HEIGHT | REMARKS |
| | | CW | HW | S/W | | |
| HWC | WATER CLOSET–HANDICAPPED REGULAR FLUSH VALVE | 1" | — | 4" | 17" | 18" TO TOP OF SEAT |
| HLAV | LAVATORY–HANDICAPPED WALL HUNG | 1/2" | 1/2" | 1–1/4" | 34" | |
| HSH | HANDICAPPED SHOWER VALVE ASSEMBLY | 1/2" | 1/2" | 3" | MOUNT SHOWER VALVE 40"AFF SHOWER HEAD MEN'S 6'–8"AFF SHOWER HEAD WOMEN'S 6'–0"AFF | |

## SYMBOLS & ABBREVIATIONS

- RAIN WATER LEADER (DS) OR STORM
- SOIL OR WASTE ABOVE FLOOR OR CEILING (S OR W)
- SOIL OR WASTE BELOW FLOOR (S OR W)
- VENT (V)
- HOT WATER (HW)
- COLD WATER (CW)
- CIRCULATING HOT WATER (CHW)
- G — GAS (G)

| | | | |
|---|---|---|---|
| AD | AREA DRAIN | HB | HOSE BIBB |
| AFF | ABOVE FINISHED FLOOR | HD | HUB DRAIN |
| AFG | ABOVE FINISHED GRADE | HWH | HOT WATER HEATER |
| AP | ACCESS PANEL | HUR | HANDICAPPED URINAL |
| ARV | ACID RESISTANT VENT | INV | INVERT |
| ARW | ACID RESISTANT WASTE | LAV | LAVATORY |
| BV | BALL VALVE | MH | MANHOLE |
| CHK.V. | CHECK VALVE | MS | MEMORY STOP |
| CI | CAST IRON | HLAV | HANDICAPPED LAVATORY |
| CLG. | CEILING | PRV | PRESSURE REDUCING VALVE |
| CO | CLEANOUT | RD | ROOF DRAIN |
| CT | COUNTER TOP | RV | RELIEF VALVE |
| DN | DOWN | SD | SHOWER DRAIN |
| F.CO. | FLOOR CLEANOUT | SH | SHOWER HEAD |
| FD | FLOOR DRAIN | SS | SERVICE SINK |
| FS | FLOOR SINK | T&P | TEMPERATURE & PRESSURE |
| DD | DECK DRAIN | UR | URINAL |
| HEDF | HANDICAPPED DRINKING FOUNTAIN | VTR | VENT THRU ROOF |
| EDF | ELECTRIC DRINKING FOUNTAIN | WC | WATER CLOSET |
| ERD | EQUIPMENT ROOM DRAIN | HWC | HANDICAPPED WATER CLOSET |
| FA | FRESH AIR | WH | WALL HYDRANT (WATER) |
| FD | FLOOR DRAIN | YH | YARD HYDRANT (WATER) |
| GI | GALVANIZED IRON | WHA | WATER HAMMER ARRESTOR |
| GV | GATE VALVE | Y.CO. | YARD CLEANOUT |
| GL.V. | GLOBE VALVE | | |
| FFD | FUNNEL FLOOR DRAIN | | |
| FCV | FLOW CONTROL VALVE | | |

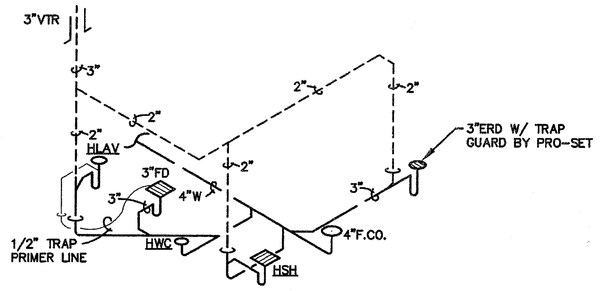


S.W&V RISER DIAGRAM
NO SCALE

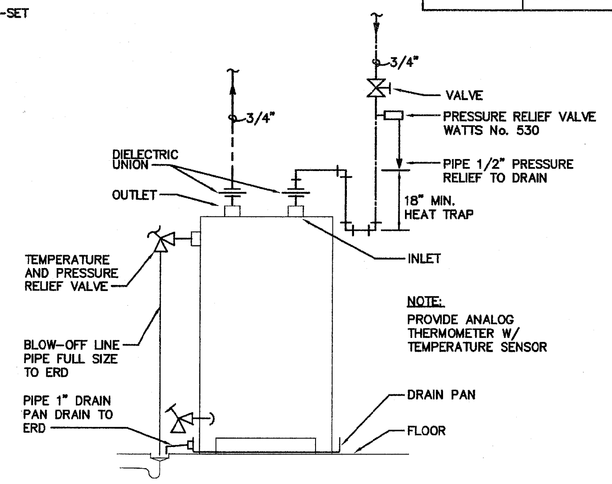


ELECTRIC WATER HEATER PIPING DIAGRAM
NO SCALE

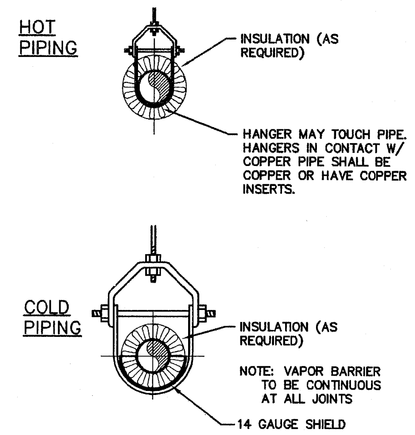


INSULATED PIPING PROTECTION DETAILS
NO SCALE

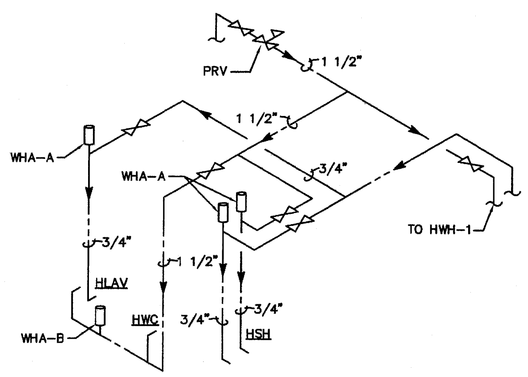


H&CW RISER DIAGRAM
NO SCALE

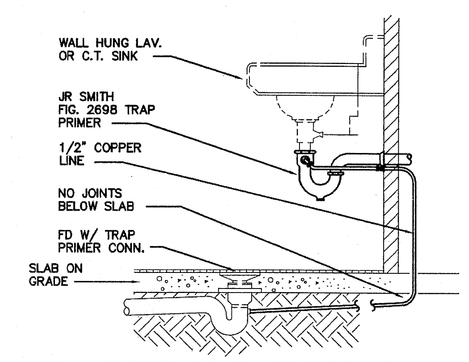


WATER SAVER TRAP PRIMER PIPING DETAIL
NO SCALE

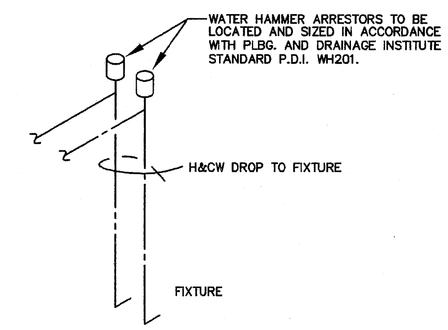


TYPICAL WATER PIPING DETAIL FOR SINGLE FIXTURE
NO SCALE

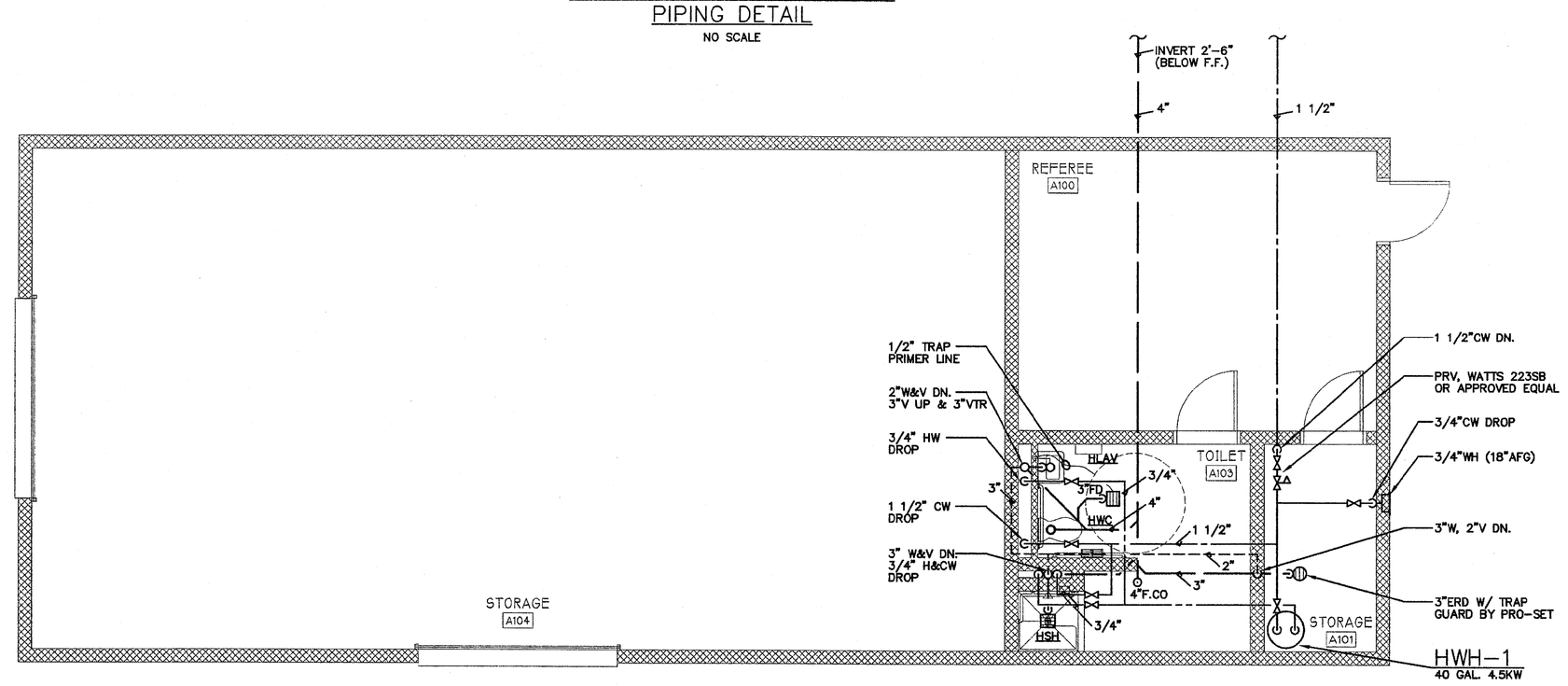


A | PLUMBING FLOOR PLAN 1/4" = 1'-0"

BAA MECHANICAL ENGINEERS INC
500 Bishop Street Suite F-3 Atlanta, GA 30318 Ph: 404-355-0050 Fax: 404-355-1050

Fulton County Schools
Where Students Come First

# Stadium Improvements

2400 Union Road, S.W.
Atlanta, Georgia 30331

© 2007 THESE DOCUMENTS REMAIN THE PROPERTY OF THE ARCHITECT AND MAY NOT BE USED OR REPRODUCED WITHOUT WRITTEN PERMISSION.

NOT RELEASED FOR CONSTRUCTION

| | |
|---|---|
| 08/24/06 | FOR BID |

REVISIONS

GEORGIA REGISTERED No. 13827 PROFESSIONAL ENGINEER R. LAMAR LEE

Gardner Spencer Smith Tench & Jarbeau
A Professional Corporation for the Practice of Architecture
127 Peachtree St., NE
Suite 1020
Atlanta, Georgia 30303
404 522 8805
404 521 2118 (f)
www.gsstj.com

PROJECT NO.
09102

SHEET TITLE
REFEREE OUTBUILDING - PLUMBING FLOOR PLAN

SHEET NO.
P-1